Technical data sheet

Cutting ring

Item number: 2029111

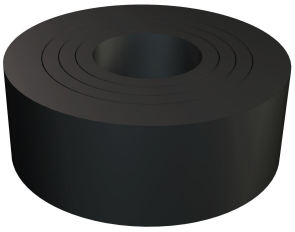

Rubber cutting ring (cuttable sealing ring) to DIN 46320 for cone cable gland.

Pg

NBR SBR Rubber mixture

Master data

Item number	2029111
Type	107 B PG11
Description 1	Cutting ring
Manufacturer	OBO
Dimension	PG11
Colour	Black
Material	Rubber mixture
Smallest sales unit	100
Unit of quantity	Units
Weight	0,132 kg
Weight unit	kg/100 pairs
CO2 Footprint (GWP) Cradle-to-Gate	0,0055 kg CO2e / 1 Piece

Technical data sheet

Cutting ring

Item number: 2029111

Dimensions

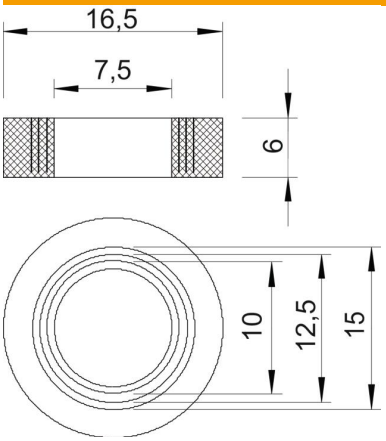

Dimension D1	7,5 mm
Dimension D2	16,5 mm
Dimension D3	10 mm
Dimension D4	12,5 mm
Dimension D5	15 mm
Dimension H	6 mm

Technical specifications

Sealing area D, max.	12,5 mm
Sealing area D, min.	7,5 mm
Size	Pg 11